MIDWAY MFG. CO.

PARTS CATALOG

CABLE ADDRESS
"MIDCO"

MIDWAY MFG. CO.

PHONE: AREA CODE 312 678-1350

CHICAGO PHONE: 625-3950

3750 RIVER ROAD • SCHILLER PARK, ILLINOIS 60176

Dear Operator:

It has long been the aim of Midway Mfg. Co. to build our equipment as serviceable and trouble-free as is possible. However, as we are all aware, it may sometimes become necessary to replace certain components.

Therefore, as an aid to our many operators and service managers throughout the country, we the people of Midway are proud to present the following information necessary to efficiently order replacement parts.

Other items (not listed) which rarely require replacement are also available upon request.

Yours truly,

MIDWAY MFG. CO.

Richard Konopa

Richard Konopa
Parts & Service Manager

RK/db

ALWAYS REMEMBER

When ordering replacement parts it is necessary to communicate the following:

1. Specify:
   a) Quantity
   b) Part or assembly number
   c) Description and/or location
   d) Name of game for which parts are needed

2. Specify route:
   1) Air Freight
   2) Air Express
   3) Air Parcel Post
   4) United Parcel Service
   5) Railway Express
   6) Truck
   7) Parcel Post

3. Service: Midway Mfg. Co. understands the necessity of keeping all equipment operational. We therefore endeavour to process all orders in not more than 24 hours.

4. Special Orders: Certain parts which are not of a stock nature must naturally be fitted in our production schedule.

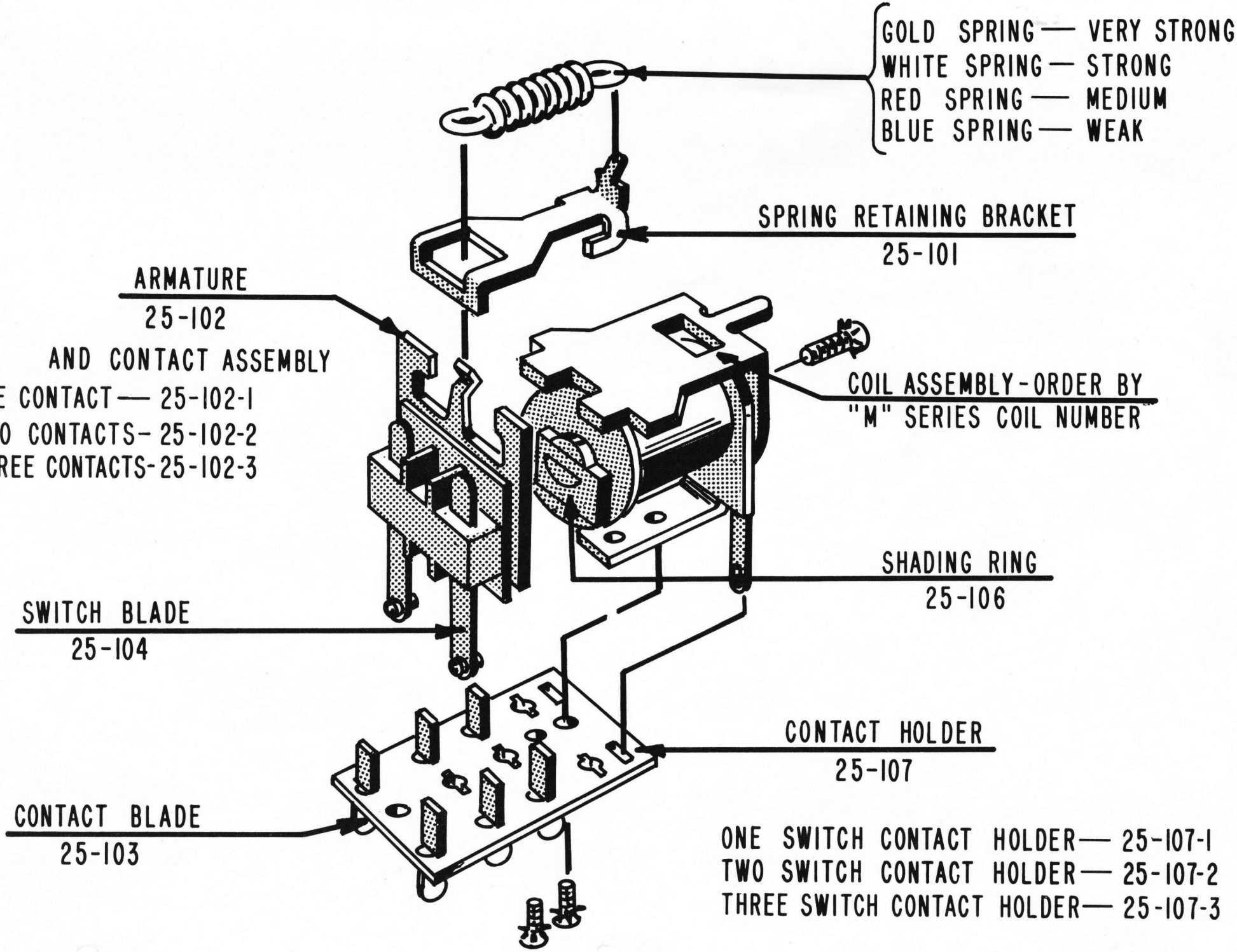
GOLD SPRING — VERY STRONG
WHITE SPRING — STRONG
RED SPRING — MEDIUM
BLUE SPRING — WEAK
SPRING RETAINING BRACKET
25-101
ARMATURE
25-102
AND CONTACT ASSEMBLY
ONE CONTACT — 25-102-1
TWO CONTACTS - 25-102-2
THREE CONTACTS - 25-102-3
COIL ASSEMBLY - ORDER BY
"M" SERIES COIL NUMBER
SHADING RING
25-106
SWITCH BLADE
25-104
CONTACT HOLDER
25-107
CONTACT BLADE
25-103
ONE SWITCH CONTACT HOLDER — 25-107-1
TWO SWITCH CONTACT HOLDER — 25-107-2
THREE SWITCH CONTACT HOLDER — 25-107-3

PLAYER UP STEP UP UNIT

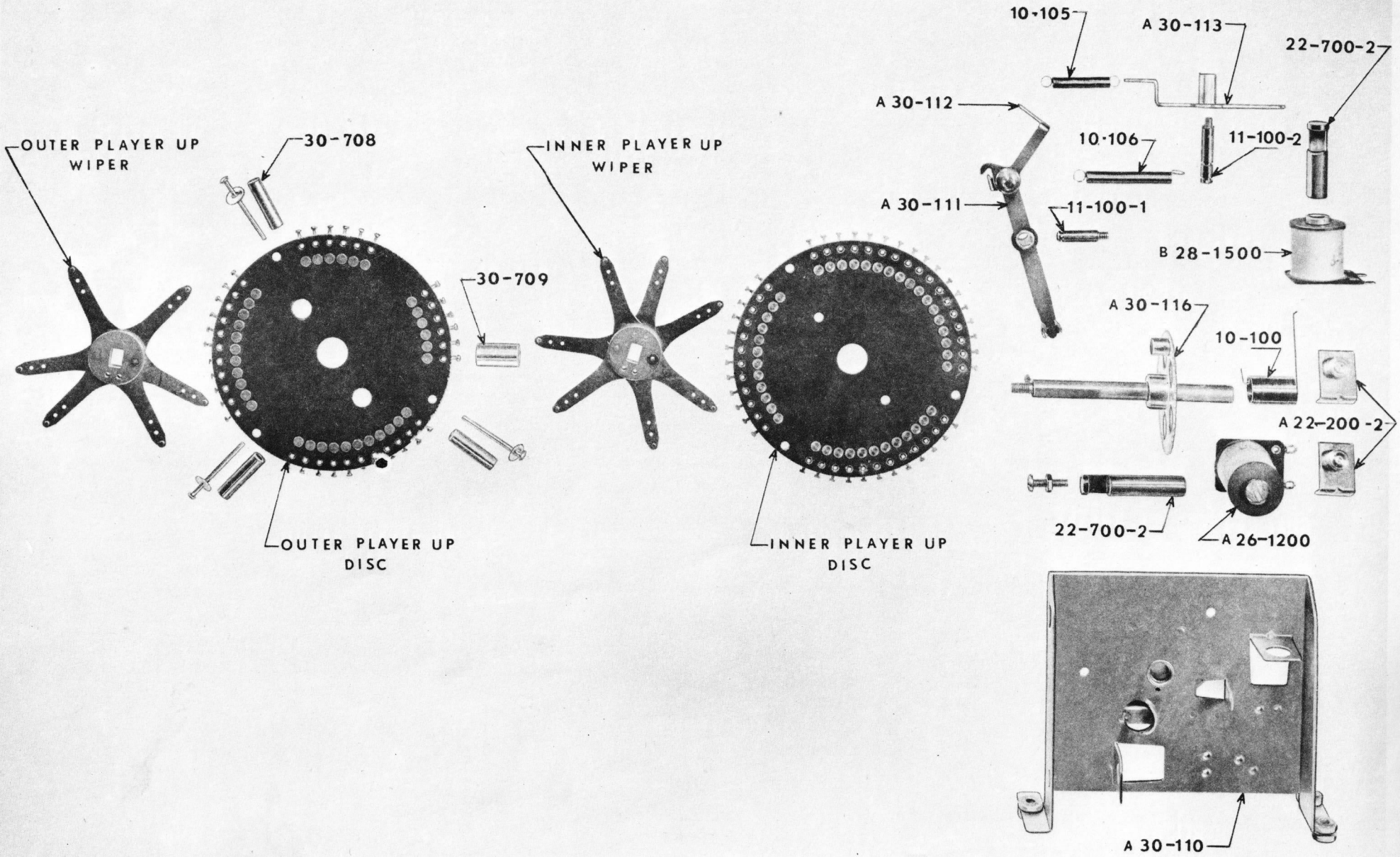

COBRA FLAS PACKAGE

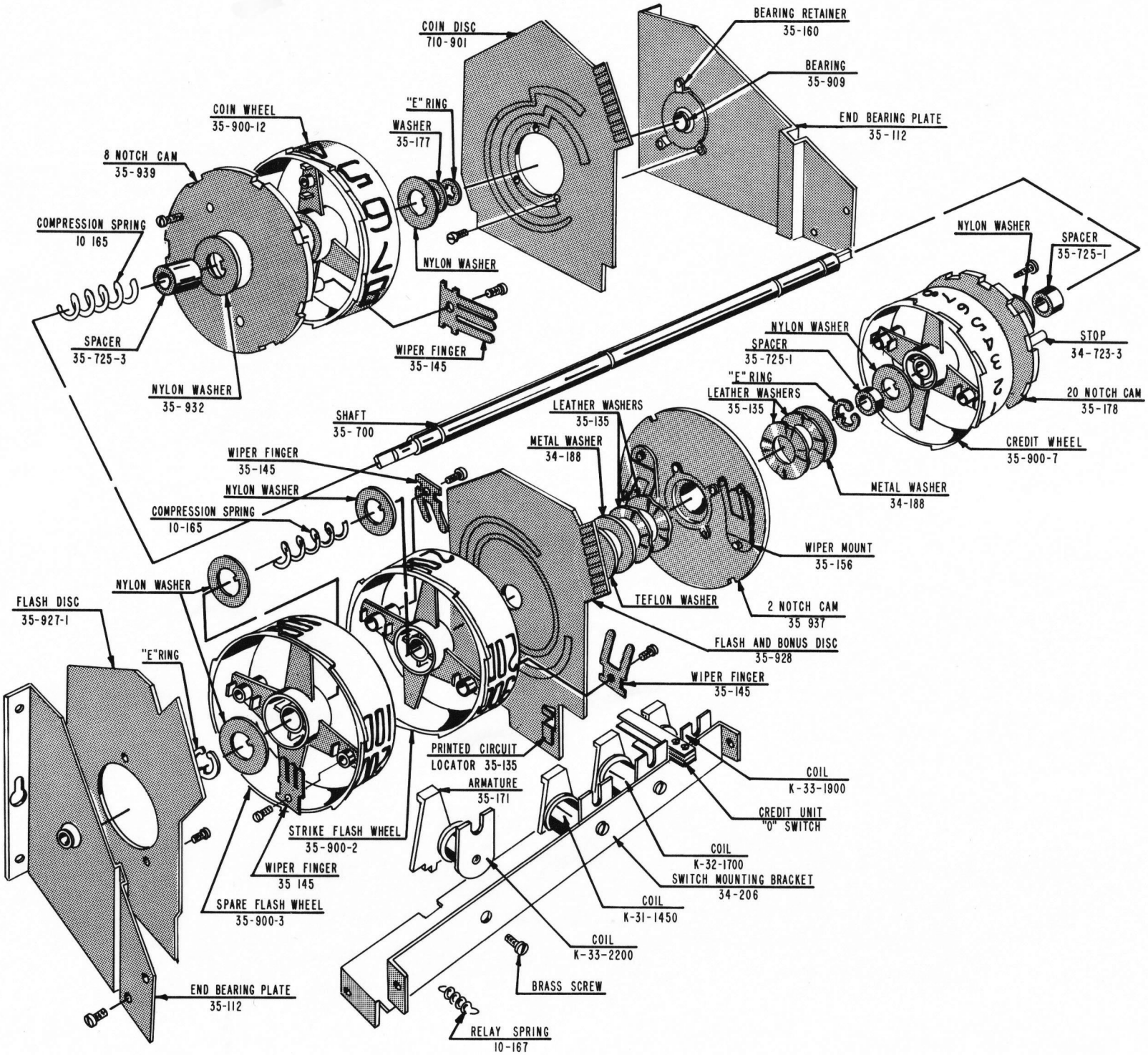

COBRA FRAME PACKAGE

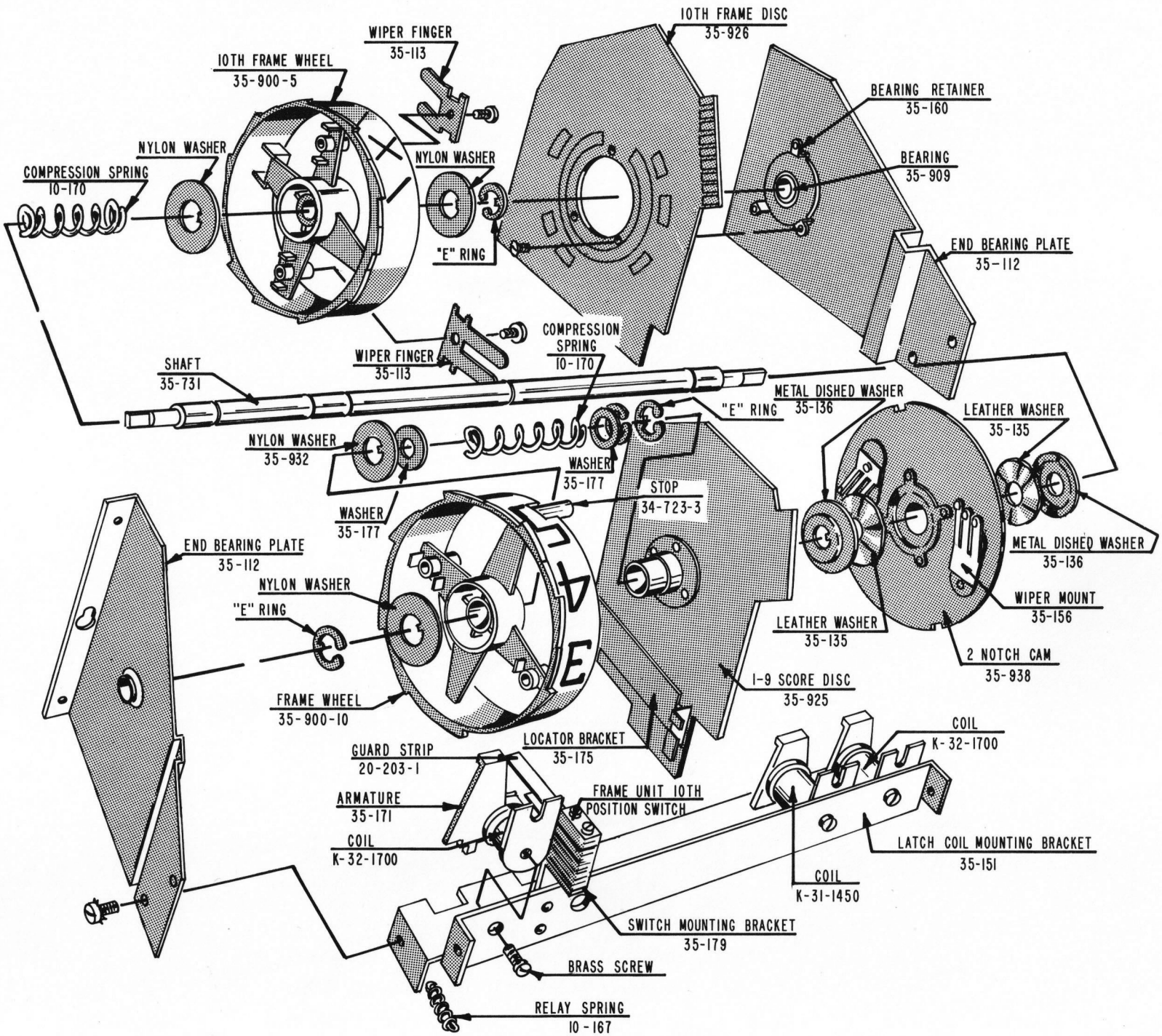

SCORE PACKAGE

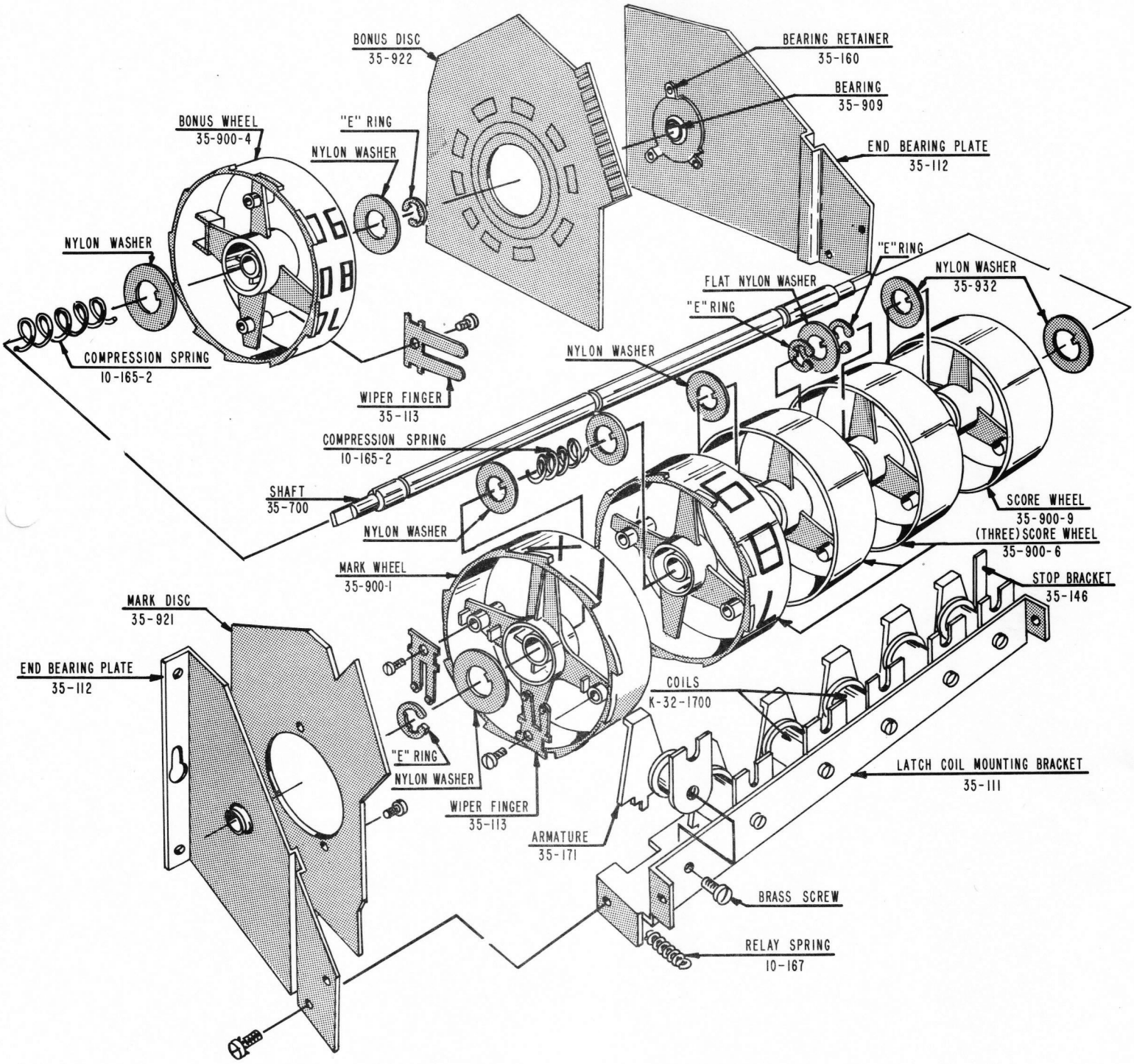

RESET MECHANISM

19-999

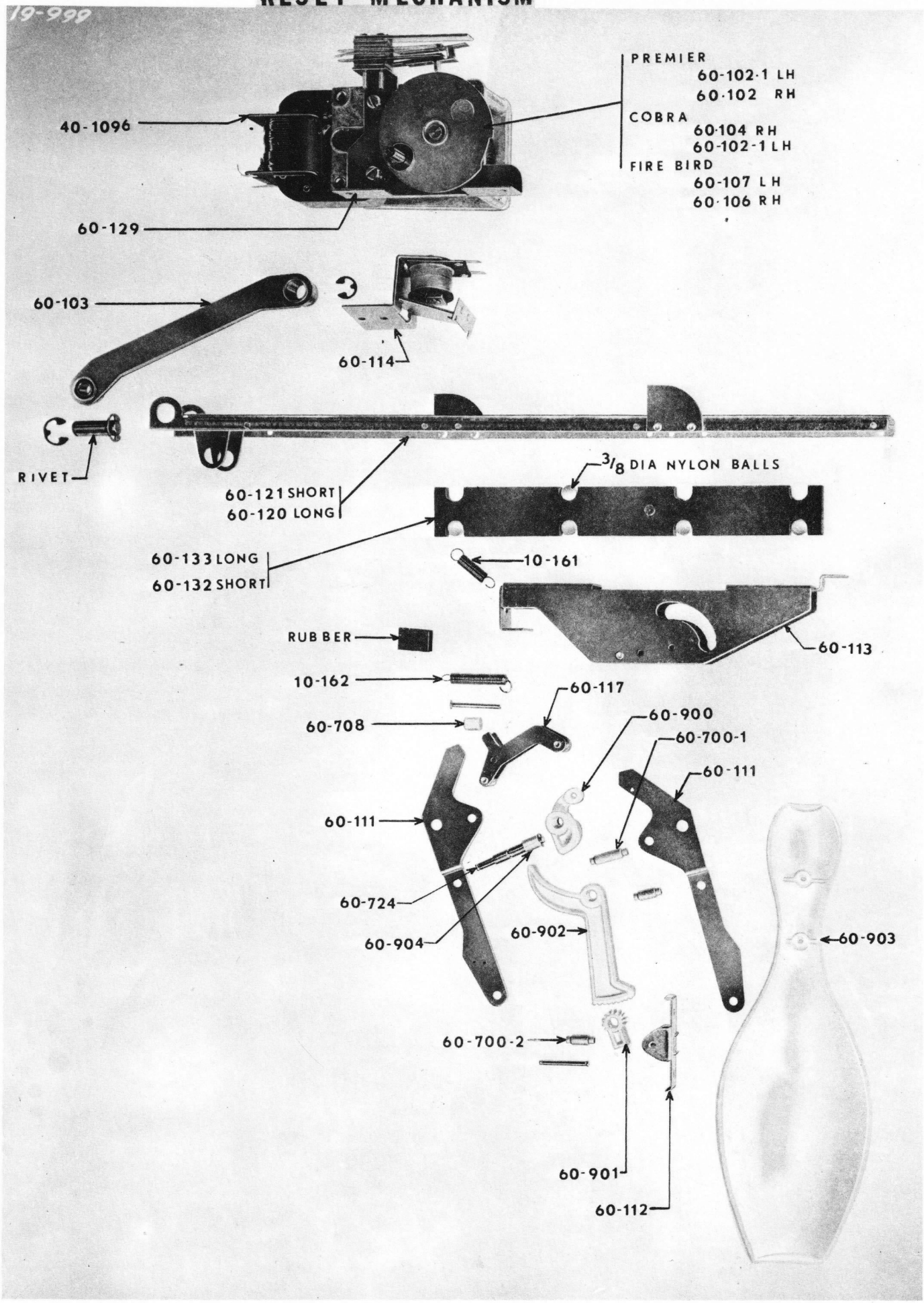

POWER ASSEMBLY

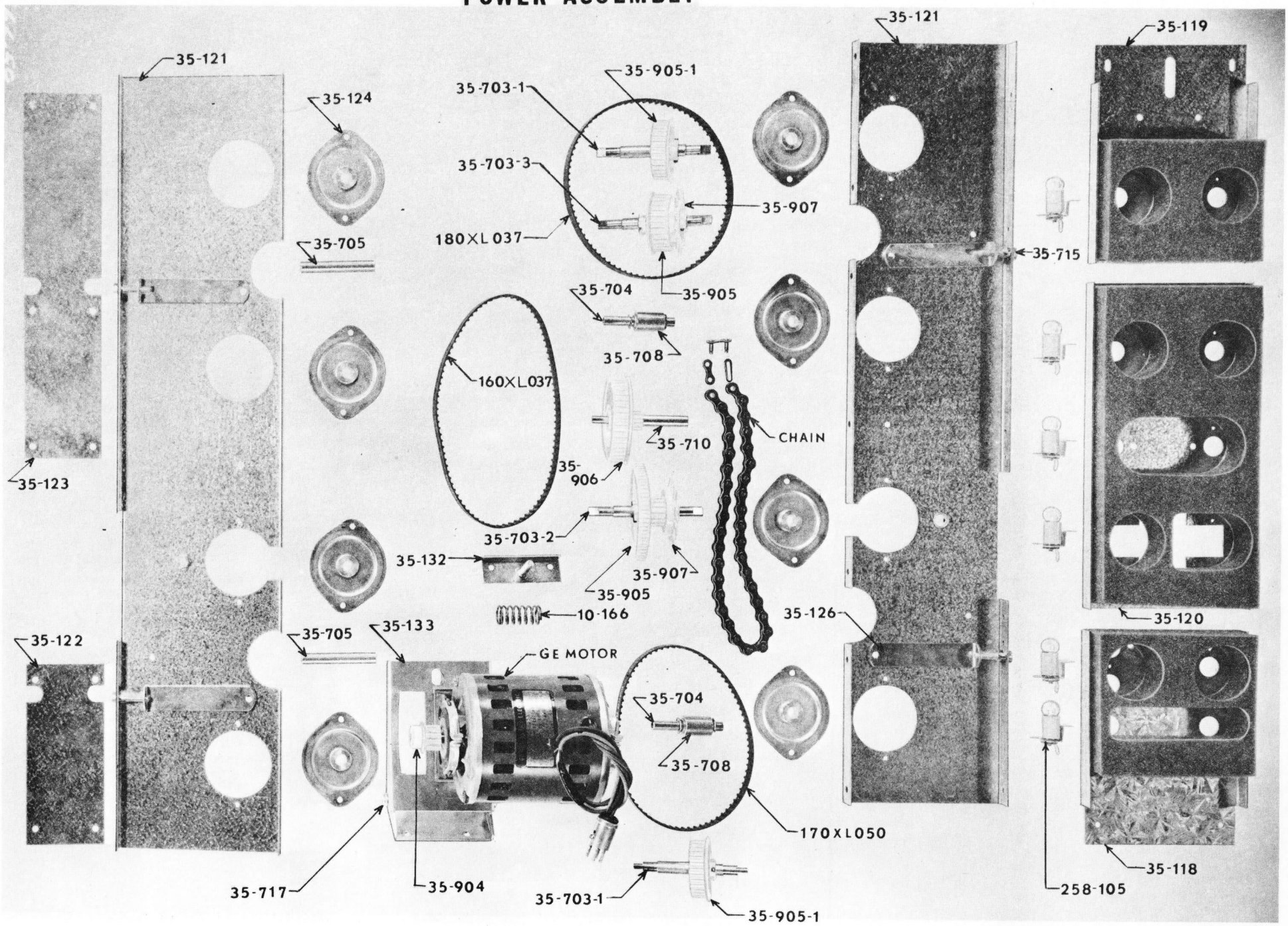

PRICE LIST

ARRANGED IN NUMERICAL ORDER

PART NUMBER	DESCRIPTION		PRICE
126-5	Spinner Motor----------		6.00 ea
216	Score Motor----------		12.00 ea
395	Ball Lift Motor----------		16.00 ea
401	Target Motor----------		16.00 ea
421	Bat Unit Motor----------		20.00 ea
422	Flash Motor----------		16.00 ea
434	Bat Motor----------		12.00 ea
548	Pitch Unit Motor----------		14.00 ea
549	Flash Motor----------		12.00 ea
693	Car Motor----------		14.00 ea
743	Car Motor----------		14.00 ea
797	Flash Motor----------		12.00 ea
843	Ball Motor----------		18.00 ea
860	Ball Motor 50 cycle---------		18.00 ea
960	Inner Target Motor----------		14.00 ea
RAE	Outer Target Motor----------		36.00 ea
1078	Target Reset Motor----------		14.00 ea
1096	Pin Reset Motor----------		20.00 ea
1127	Score Motor----------		28.00 ea
1136	Outer Target Motor----------		14.00 ea
1148	Score Motor----------		26.00 ea
1160	Target Motor----------		24.00 ea
1181	Outer Target Motor----------		24.00 ea
1271	Center Target Motor---------		14.00 ea

PARTS SOLD IN QUANTITIES AS SHOWN

PRICE LIST

ARRANGED IN NUMERICAL ORDER

PART NUMBER	DESCRIPTION		PRICE
1272	Flag Motor----------		14.00 ea
1274	Pirate Motor----------		22.00 ea
1359	Pitch Motor----------		14.00 ea
1364	Target Reset Motor----------		15.00 ea
1388	Score Motor----------		26.00 ea
1415	Control Motor----------		15.00 ea
1426	Control Motor----------		14.00 ea
1428	Center Target Motor---------		24.00 ea
1439	Star Motor----------		14.00 ea
1450	Score Motor----------		26.00 ea
GE	Score Motor----------		52.00 ea
W-B2320	Timer Motor----------		14.00 ea
3269C	Cat and Mouse Motor---------		20.00 ea
3271A	Duck Motor----------		19.00 ea
3323A	Duck Motor----------		19.00 ea
3448A	Star Motor----------		19.00 ea
1478	Vertical Saucer Motor-------		22.00 ea
1496	Horizontal Saucer Motor-----		24.00 ea

PARTS SOLD IN QUANTITIES AS SHOWN

PRICE LIST

ARRANGED IN NUMERICAL ORDER

PART NUMBER	DESCRIPTION		PRICE
A-23-700	Coil----------		1.60 ea.
A-24-32	Coil----------		1.60 ea.
A-24-800	Coil----------		1.60 ea.
A-25-1000	Coil----------		1.60 ea.
A-25-1150	Coil----------		1.60 ea.
A-26-1200	Coil----------		1.60 ea.
A-27-1500	Coil----------		1.60 ea.
B-27-1100	Coil----------		1.60 ea.
B-28-1500	Coil----------		1.60 ea.
B-28-1600	Coil----------		1.60 ea.
B-30-2200	Coil----------		1.60 ea.
C-27-1400	Coil----------		1.60 ea.
C-28-1800	Coil----------		1.60 ea.
D-29-1400	Coil----------		1.60 ea.
D-29-1550	Coil----------		1.60 ea.
D-30-1800	Coil----------		1.60 ea.
D-30T-1800	Coil----------		1.60 ea.
D-31-2500	Coil----------		1.60 ea.
D-32-2700	Coil----------		1.60 ea.
E-28-1150	Coil----------		1.60 ea.
F-30-1800	Coil----------		1.60 ea.
G-21-850	Coil----------		3.60 ea.
G-23-1300	Coil----------		5.00 ea.
J-29-1400	Coil----------		1.60 ea.

PARTS SOLD IN QUANTITIES AS SHOWN

PRICE LIST

ARRANGED IN NUMERICAL ORDER

PART NUMBER	DESCRIPTION		PRICE
K-33-1900	Coil----------		1.50 ea.
K-31-1450	Coil----------		1.50 ea.
K-32-1700	Coil----------		1.50 ea.
K-33-2200	Coil----------		1.50 ea.
K-32T-2000	Coil----------		1.50 ea.
M-33-1800	Coil----------		1.50 ea.
M-28-450	Coil----------		1.50 ea.
M-28-570	Coil----------		1.50 ea.
M-32-1500	Coil----------		1.50 ea.
M-34-2400	Coil----------		1.50 ea.
M-35-3000	Coil----------		1.50 ea.
M-36-3300	Coil----------		1.50 ea.
M-39-7000	Coil----------		1.50 ea.
U-24-1100	Coil----------		4.20 ea.
P-24-900	Coil----------		2.50 ea.
P-25-1050	Coil----------		2.50 ea.

PARTS SOLD IN QUANTITIES AS SHOWN

PRICE LIST

ARRANGED IN NUMERICAL ORDER

PART NUMBER	DESCRIPTION		PRICE
511-101	Deluxe Baseball Glass--------		24.00 ea
512-102	Target Gallery Glass---------		24.00 ea
515-103	2 Player Target Gallery Glass		24.00 ea
516-104	Carnival Glass----------		24.00 ea
517-105	Slugger Glass----------		24.00 ea
518-106	Rifle Range Glass----------		20.00 ea
520-107	Raceway Champ Glass----------		24.00 ea
521-108	Winner Glass----------		24.00 ea
522-109	Top Hit Glass----------		24.00 ea
523-110	Trophy Gun Glass----------		10.00 ea
525-111	Flying Turns Glass----------		24.00 ea
527-112	Rodeo Glass----------		24.00 ea
528-113	Rifle Champ Glass----------		10.00 ea
529-114	Play Ball Glass----------		24.00 ea
529-115	Play Ball Insert Glass-------		4.00 ea
532-116	Mystery Score Glass----------		24.00 ea
533-117	Monster Gun Glass----------		20.00 ea
534-118	Little League Glass----------		12.00 ea
534-119	Little League Insert Glass---		4.00 ea
535-120	Captain Kid Glass----------		10.00 ea
536-121	Fun Ball Glass----------		24.00 ea
536-122	Fun Ball Insert Glass--------		4.00 ea
537-123	Space Gun Glass----------		20.00 ea
538-124	Flying Saucer Glass----------		20.00 ea

PARTS SOLD IN QUANTITIES AS SHOWN

PRICE LIST

ARRANGED IN NUMERICAL ORDER

PART NUMBER	DESCRIPTION		PRICE
700-201	Premier Score Plexi Glass----		30.00 ea
700-202	Premier Hood Plexi Glass-----		12.00 ea
710-203	Cobra Score Plexi Glass------		30.00 ea
710-204	Cobra Hood Plexi Glass-------		12.00 ea
720-205	Firebird Score Plexi Glass---		30.00 ea
720-206	Firebird Hood Plexi Glass----		12.00 ea

PARTS SOLD IN QUANTITIES AS SHOWN

PRICE LIST

ARRANGED IN NUMERICAL ORDER

PART NUMBER	DESCRIPTION		PRICE
35-111	Latch coil mounting bracket --		1.00 ea.
A35-112	End bearing plate assembly ---		1.50 ea.
35-113	Wiper finger ----------		3.80 doz.
35-118	Bottom mounting bracket ------		.80 ea.
35-119	Top mounting bracket ---------		.80 ea.
35-120	Mounting bracket ----------		1.20 ea.
35-121R	Right mounting channel -------		4.00 ea.
35-121L	Left mounting channel --------		4.00 ea.
35-122	Cover plate ----------		.35 ea.
35-123	Cover plate ----------		.60 ea.
A-35-124	Bearing assembly ----------		.75 ea.
35-126	Adjuster bracket ----------		.40 ea.
35-132	Motor adjusting plate --------		.40 ea.
35-133	Motor support channel --------		.25 ea.
35-135	Leather washer ----------		1.20 doz.
35-136	Metal dished washer ----------		1.20 doz.
35-145	Wiper finger ----------		3.80 doz.
35-146	Stop bracket ----------		.60 doz.
35-151	Latch coil mounting bracket --		1.00 ea.
35-156	Wiper mount ----------		4.80 doz.
35-171	Armature ----------		4.80 doz.
35-175	Locator bracket ----------		1.20 doz.
35-177	Washer ----------		.60 doz.
35-178	20 notch cam ----------		1.00 ea.

PARTS SOLD IN QUANTITIES AS SHOWN

PRICE LIST

ARRANGED IN NUMERICAL ORDER

PART NUMBER	DESCRIPTION		PRICE
35-179	Switch mounting bracket ------		.60 doz.
35-700	Shaft ----------		3.00 ea.
35-703-1	Drive shaft ----------		1.00 ea.
35-703-2	Drive shaft ----------		1.00 ea.
35-703-3	Drive shaft ----------		1.00 ea.
A-35-704	Idler shaft assembly ---------		1.50 ea.
35-704	Idler shaft assembly ---------		.60 ea.
35-705	Spacer ----------		.40 ea.
35-708	Idler bushing ----------		.60 ea.
35-710	Pinion shaft ----------		.80 ea.
35-715	Adjuster screw ----------		.50 ea.
35-717	Pivot bushing ----------		.25 ea.
35-725-1	Spacer ----------		3.00 doz.
35-725-3	Spacer ----------		3.00 doz.
35-731	Shaft ----------		4.50 ea.
35-900-1	Marks wheel ----------		1.20 ea.
35-900-2	Strike flash wheel ----------		1.20 ea.
35-900-3	Spare flash wheel ----------		1.20 ea.
35-900-4	Bonus wheel ----------		1.20 ea.
35-900-5	10th frame wheel ----------		1.20 ea.
35-900-6	Score wheel ----------		1.20 ea.
35-900-7	Credit wheel ----------		1.20 ea.
35-900-9	Score wheel ----------		1.20 ea.
35-900-10	Frame wheel ----------		1.20 ea.

PARTS SOLD IN QUANTITIES AS SHOWN

PRICE LIST

ARRANGED IN NUMERICAL ORDER

PART NUMBER	DESCRIPTION		PRICE
35-900-12	Coin wheel ----------		1.20 ea.
35-904	Motor pulley ----------		.80 ea.
A-35-905	Main drive gear, shaft and sprocket assembly ----------		4.00 ea.
A-35-905-1	Intermediate gear and shaft assembly ----------		2.00 ea.
35-906	Idler gear ----------		1.80 ea.
A-35-906	Idler gear and shaft assembly		2.50 ea.
A-35-907	Gear, shaft and sprocket assembly ----------		2.00 ea.
35-921	Marks disc ----------		3.50 ea.
35-922	Bonus disc ----------		3.50 ea.
35-925	1-9 score disc ----------		3.50 ea.
35-926	10th frame disc ----------		3.50 ea.
35-927-1	Flash disc ----------		3.50 ea.
35-928	Bonus disc ----------		4.00 ea.
35-932	Nylon washer ----------		1.20 doz.
35-937	2 notch cam ----------		1.00 ea.
35-938	8 notch cam ----------		1.00 ea.
35-939	2 notch cam ----------		1.00 ea.
A-60-100-1	Complete pin mechanism without pin ----------		6.00 ea.
A-60-100-2	Complete pin mechanism with pin ----------		7.00 ea.
A-60-102	Pin reset motor cam right side ----------		1.50 ea.
A-60-102-1	Pin reset motor cam left side ----------		1.50 ea.

PARTS SOLD IN QUANTITIES AS SHOWN

PRICE LIST

ARRANGED IN NUMERICAL ORDER

PART NUMBER	DESCRIPTION		PRICE
A-60-103	Pin drive arm ----------		.80 ea.
A-60-104	Pin reset motor cam right side ----------		1.50 ea.
A-60-106	Pin reset motor right side ----------		1.50 ea.
A-60-107	Pin reset motor right side ----------		1.50 ea.
60-111	Pin lever ----------		.40 ea.
60-112	Pin mounting bracket ---------		.20 ea.
60-113	Pin mechanism mounting bracket ----------		1.00 ea.
60-114	Coil bracket ----------		.60 ea.
A-60-116	Pin reset armature plate -----		.50 ea.
60-117	Latch ----------		.20 ea.
60-121	Reset bar ----------		.80 ea.
60-129	Motor mounting bracket -------		.60 ea.
60-132	Ball retainer ----------		2.00 ea.
60-133	Ball retainer ----------		1.00 ea.
60-700-1	Pivot post ----------		.30 ea.
60-700-2	Pivot post ----------		.30 ea.
60-708	Roller ----------		.15 ea.
60-724	Reset shaft ----------		.30 ea.
60-900	Cam ----------		.25 ea.
60-901	Pinion ----------		.15 ea.
60-902	Drive arm ----------		1.00 ea.
60-903	Pin ----------		1.00 ea.

PARTS SOLD IN QUANTITIES AS SHOWN

PRICE LIST

ARRANGED IN NUMERICAL ORDER

PART NUMBER	DESCRIPTION		PRICE
710-901	Coin disc ----------		3.50 ea.
	MISCELLANEOUS		
	"0°" credit unit switch -----		.60 ea.
	Frame unit 10th position switch ----------		.60 ea.
	Outer player up unit disc ---		3.00 ea.
	Inner player up unit disc ---		3.00 ea.
	Outer player up unit disc wiper ----------		3.00 ea.
	Inner player up unit disc wiper ----------		3.00 ea.
	Drive chain ----------		3.00 ea.
	160 x L037 drive belt -------		3.00 ea.
	170 x L050 drive belt -------		4.00 ea.
	180 x L050 drive belt -------		4.00 ea.

PARTS SOLD IN QUANTITIES AS SHOWN

PRICE LIST

ARRANGED IN NUMERICAL ORDER

PART NUMBER	DESCRIPTION		PRICE
126-5	Spinner Motor----------		6.00 ea
216	Score Motor----------		12.00 ea
395	Ball Lift Motor----------		16.00 ea
401	Target Motor----------		16.00 ea
421	Bat Unit Motor----------		20.00 ea
422	Flash Motor----------		16.00 ea
434	Bat Motor----------		12.00 ea
548	Pitch Unit Motor----------		14.00 ea
549	Flash Motor----------		12.00 ea
693	Car Motor----------		14.00 ea
743	Car Motor----------		14.00 ea
797	Flash Motor----------		12.00 ea
843	Ball Motor----------		18.00 ea
860	Ball Motor 50 cycle---------		18.00 ea
960	Inner Target Motor----------		14.00 ea
RAE	Outer Target Motor----------		36.00 ea
1078	Target Reset Motor----------		14.00 ea
1096	Pin Reset Motor----------		20.00 ea
1127	Score Motor----------		28.00 ea
1136	Outer Target Motor----------		14.00 ea
1148	Score Motor----------		26.00 ea
1160	Target Motor----------		24.00 ea
1181	Outer Target Motor----------		24.00 ea
1271	Center Target Motor---------		14.00 ea

PARTS SOLD IN QUANTITIES AS SHOWN

PRICE LIST

ARRANGED IN NUMERICAL ORDER

PART NUMBER	DESCRIPTION		PRICE
1272	Flag Motor----------		14.00 ea
1274	Pirate Motor----------		22.00 ea
1359	Pitch Motor----------		14.00 ea
1364	Target Reset Motor----------		15.00 ea
1388	Score Motor----------		26.00 ea
1415	Control Motor----------		15.00 ea
1426	Control Motor----------		14.00 ea
1428	Center Target Motor---------		24.00 ea
1439	Star Motor----------		14.00 ea
1450	Score Motor----------		26.00 ea
GE	Score Motor----------		52.00 ea
W-B2320	Timer Motor----------		14.00 ea
3269C	Cat and Mouse Motor---------		20.00 ea
3271A	Duck Motor----------		19.00 ea
3323A	Duck Motor----------		19.00 ea
3448A	Star Motor----------		19.00 ea
1478	Vertical Saucer Motor-------		22.00 ea
1496	Horizontal Saucer Motor-----		24.00 ea

PARTS SOLD IN QUANTITIES AS SHOWN